Building Inspection Division
THESE PLANS HAVE BEEN REVIEWED FOR COMPLIANCE WITH THE CURRENT EDITION OF THE FLORIDA BUILDING CODE
Lakeland
Date: 11/15/19
Permit Number: BLD19-06035

GRADE BEAM SCHEDULE							
MARK	GEOMETRY		LONGITUDINAL REINFORCEMENT		STIRRUPS		REMARKS
	WIDTH	DEPTH	BOTTOM	TOP	SIZE	SPACING	
GB-1	3'-0"	3'-0"	(5)#9	(5)#9	#4	12" O.C.	TIE INTO SPREAD FOOTINGS

FOOTING SCHEDULE						
TYPE	SIZE		THICKNESS	REINFORCING	REINFORCING	Comments
	LENGTH	WIDTH		TOP	BOTTOM	
F12.0	12' - 0"	12' - 0"	2' - 6"		#7 @ 10" OC EW	
F13.0	13' - 0"	13' - 0"	3' - 0"		#7 @ 10" OC EW	
F14.0	14' - 0"	14' - 0"	3' - 0"		#8 @ 10" OC EW	
F15.0	15' - 0"	15' - 0"	3' - 0"	#8 @ 12" OC EW	#8 @ 10" OC EW	HOOK TOP BARS
F22.0	22' - 0"	22' - 0"	4' - 0"	#9 @ 12" OC EW	#9 @ 12" OC EW	HOOK TOP BARS
MF-1	SEE PLAN	14' - 0"	3' - 0"	#9 @ 12" OC EW	#9 @ 12" OC EW	HOOK TOP BARS
MF-2	SEE PLAN	SEE PLAN	2' - 0"	#5 @ 12" OC EW	#5 @ 12" OC EW	HOOK TOP BARS
WF3.0	SEE PLAN	3' - 0"	1' - 6"	(4) #6 CONT. W/#5 @12" OC	(4) #6 CONT. W/#5 @12" OC	HOOK TOP BARS
WF6.0	SEE PLAN	6' - 0"	2' - 0"	(7) #6 CONT. W/#6 @10" OC	(7) #6 CONT. W/#6 @10" OC	HOOK TOP BARS
WF6.0A	SEE PLAN	6' - 0"	2' - 0"	(7) #6 CONT. W/#6 @8" OC	(7) #6 CONT. W/#6 @8" OC	HOOK TOP BARS

D1 FOUNDATION SCHEDULE
S6-1-04 SCALE:NOT TO SCALE

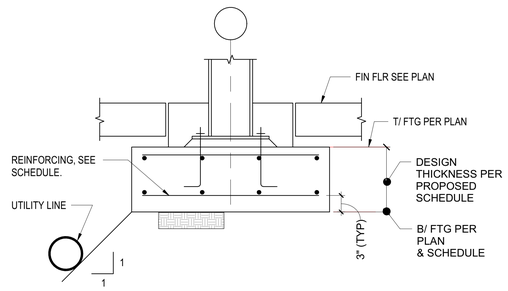

D2 FOOTING AT UTILITY LINE DETAIL
S6-1-04 SCALE:NOT TO SCALE

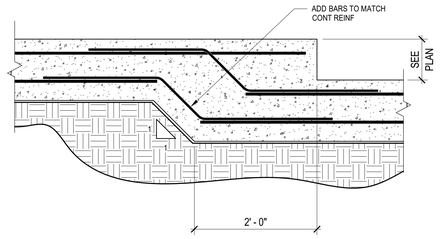

D3 TYPICAL STEPPED FOUNDATION DETAIL
S6-1-04 SCALE:NOT TO SCALE

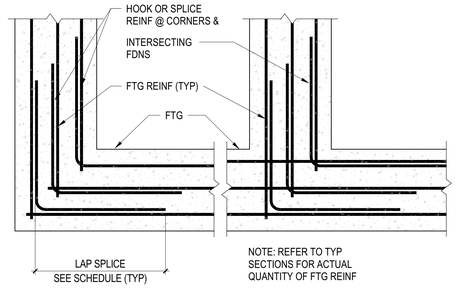

CONTINUITY OF FDN REINF @ CORNER & INTERSECTIONS

D4 DETAIL (PLAN VIEW)
S6-1-04 SCALE:NOT TO SCALE

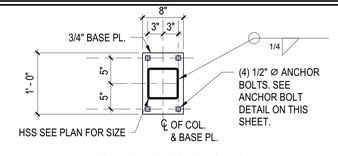

BASE PLATE TYPE 1 (BP3)

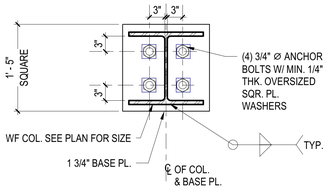

BASE PLATE TYPE 1 (BP1)

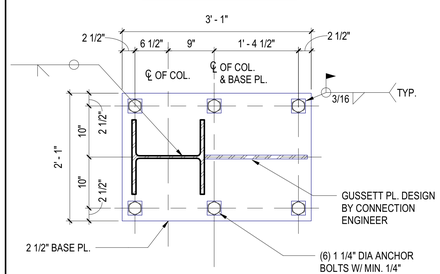

BASE PLATE TYPE 2 (BP2)

B1 BASE PLATE & ANCHOR BOLT DETAIL1
S6-1-04 SCALE:NOT TO SCALE

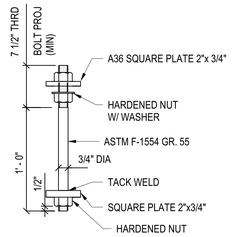

3/4" DIA ANCHOR BOLT

TYPICAL UNLESS OTHERWISE SHOWN OR NOTED

TYPICAL ANCHOR BOLT DETAILS

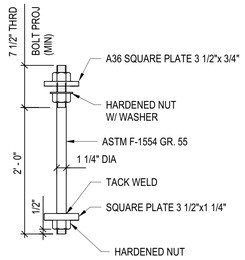

1 1/4" DIA ANCHOR BOLT

TYPICAL UNLESS OTHERWISE SHOWN OR NOTED

TYPICAL ANCHOR BOLT DETAILS

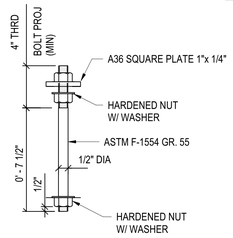

1/2" DIA ANCHOR BOLT

TYPICAL UNLESS OTHERWISE SHOWN OR NOTED

TYPICAL ANCHOR BOLT @ CANOPIES

B2 TYPICAL ANCHOR BOLT DETAILS
S6-1-04 SCALE:NOT TO SCALE

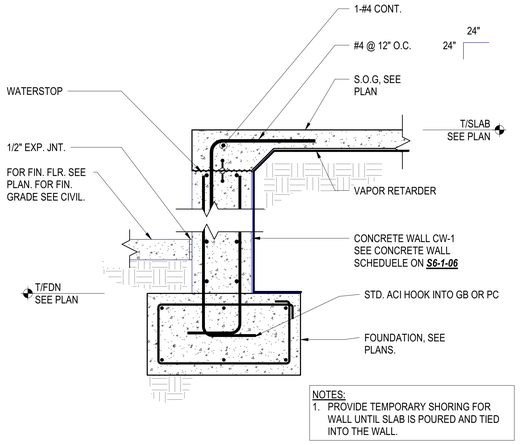

NOTES:
1. PROVIDE TEMPORARY SHORING FOR WALL UNTIL SLAB IS POURED AND TIED INTO THE WALL.

B3 TRUCK STEM WALL @ SLAB
S6-1-04 SCALE:NOT TO SCALE

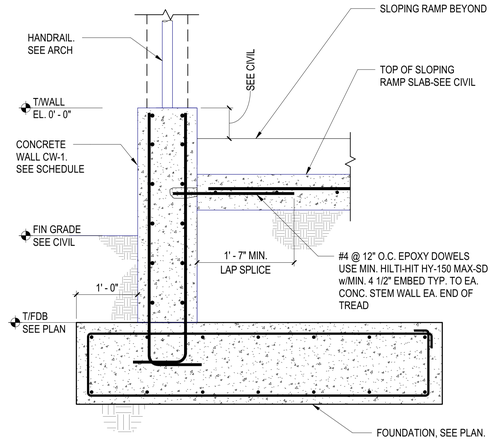

B4 TRUCK DOCK STEM WALL @ RAMP
S6-1-04 SCALE:NOT TO SCALE

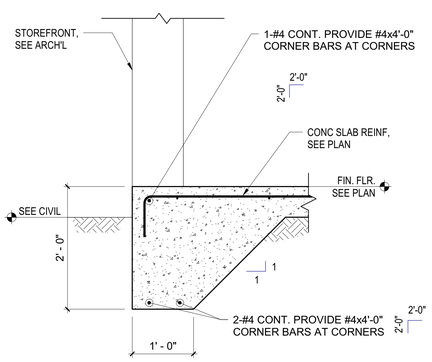

TYPICAL SLAB-ON-GRADE TURNDOWN AT STOREFRONT

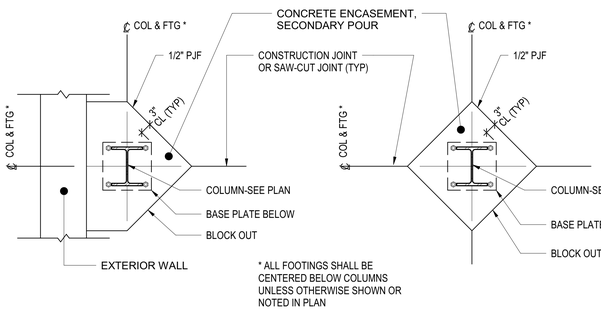

* ALL FOOTINGS SHALL BE CENTERED BELOW COLUMNS UNLESS OTHERWISE SHOWN OR NOTED IN PLAN

PERIMETER COLUMNS (PLAN VIEW)

INTERIOR COLUMNS (PLAN VIEW)

A1 DETAIL
S6-1-04 SCALE:NOT TO SCALE

A2 TYP COLUMN BLOCK-OUT DETAIL
S6-1-04 SCALE:NOT TO SCALE

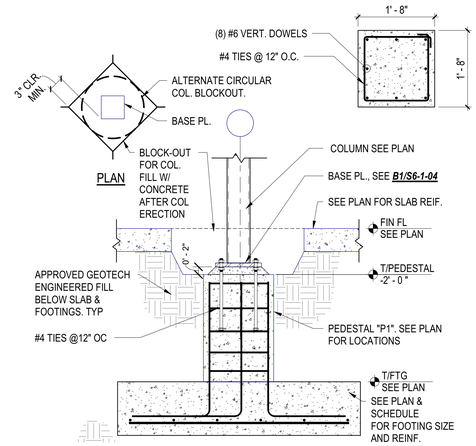

A3 INTERIOR COL. W/ PEDESTAL
S6-1-04 SCALE:NOT TO SCALE

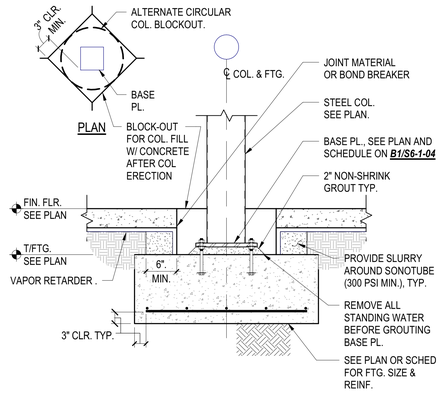

A4 INTERIOR COLUMN FTG.
S6-1-04 SCALE:NOT TO SCALE

This drawing has been prepared for the use of AECOM's client and may not be used, reproduced or relied upon by third parties, except as agreed by AECOM and its client, as required by law or for use by governmental reviewing agencies. AECOM accepts no responsibility, and denies any liability whatsoever to any party that modifies this drawing without AECOM's express written consent. Do not scale this document. All measurements must be obtained from the stated dimensions.

AECOM
BATSON-COOK CONSTRUCTION

PROJECT
PUBLIX HEADQUARTERS BUILDING ADDITION AND PARKING LOT EXPANSION
3300 PUBLIX CORPORATE PARKWAY
LAKELAND, FL 33811

CLIENT
Publix
3300 PUBLIX CORPORATE PARKWAY
LAKELAND, FL 33811
www.publix.com

CONSULTANT
AECOM
AECOM TECHNICAL SERVICES, INC.
800 Douglas Entrance
North Tower, 2nd Floor
Coral Gables, FL 33134
305.444.4691 tel 305.447.3580 fax
www.aecom.com

ARCHITECTURE
LICENSE NO. AA26000687

ENGINEERING
CA LIC. NO. 8115

http://www.aecom.com

REGISTRATION
LICENSE NO. 81224 STATE OF FLORIDA PROFESSIONAL ENGINEER
VINCENT RAJ VACCARELLO-WADEHRA, PROFESSIONAL ENGINEER, STATE OF FLORIDA, LICENSE NO. 81224

THIS ITEM HAS BEEN DIGITALLY SIGNED AND SEALED BY VINCENT RAJ VACCARELLO-WADEHRA, PROFESSIONAL ENGINEER, STATE OF FLORIDA, LICENSE NO. 81224 ON THE DATE INDICATED HERE. PRINTED COPIES OF THIS DOCUMENT ARE NOT CONSIDERED SIGNED AND SEALED AND THE SIGNATURE MUST BE VERIFIED ON ANY ELECTRONIC COPIES.

Vincent R Vaccarello -Wadehra
Digitally signed by Vincent R Vaccarello-Wadehra
Date: 2019.08.23 10:53:05 -04'00'

ISSUE/REVISION

I/R	DATE	DESCRIPTION
0	AUGUST 23, 2019	CONSTRUCTION DOCUMENTS
	AUGUST 16, 2019	90% CONSTRUCTION DOCUMENTS
	JUNE 27, 2019	STEEL DESIGN PACKAGE

PROJECT NUMBER
60601397

SHEET TITLE
STRUCTURAL FOUNDATION DETAILS

SHEET NUMBER
S6-1-04

NOTICE: THE OFFICIAL RECORD OF THIS SHEET IS THE ELECTRONIC FILE SIGNED AND SEALED UNDER RULE 61G15-23.004, F.A.C.

©2016 AECOM Corporation

Designer: Designer Checked: Checker Approved: Approver/RCH E1 30"x42"
Project Management Initials:
Last Plotted: 8/23/2019 10:48:05 AM
Filename: BIM 360:0060013970_Publix HQ/0060139 7_Publix HQ_STRUCT_2019.rvt
Printed on ___% Post-Consumer Recycled Content Paper